"APPROVED FOR RELEASE: 09/19/2001 CIA-RDP86-00513R001032420006-3

MARKIN, S.G., inzhener; SHTEFAN, V.Ye., inzhener.

Improved operation of boilers with heated hoppers. Elek.sta.27 no.1:51-52 Ja '56. (MLRA 9:6)
(Boilers)

APPROVED FOR RELEASE: 09/19/2001 CIA-RDP86-00513R001032420006-3"

"APPROVED FOR RELEASE: 09/19/2001 CIA-RDP86-00513R001032420006-3

AUTHOR: Markin, S.G., Engineer 117-[illegible]

TITLE: Socialist Competition in Maching Building Enterprises (Sotsialisticheskoye sorevnovaniye na mashinostroitel'nykh predpriyatiyakh)

PERIODICAL: Mashinostroitel', 1958, Nr 5, p 35 (USSR)

ABSTRACT: A general review of the history of the socialistic rivalry principle is given. The various aspects of this competition, as used in the machine building industry, are then listed: improvements in techniques, organization, and equipment; economizing; completing the daily norm in seven hours, then using the eighth hour to "overfullfill". The rivalry is between sections, workshops and establishments, as well as between individual workers.

AVAILABLE: Library of Congress

Card 1/1 1. Machines-Development-USSR

APPROVED FOR RELEASE: 09/19/2001 CIA-RDP86-00513R001032420006-3"

"APPROVED FOR RELEASE: 09/19/2001 CIA-RDP86-00513R001032420006-3

MAKKIN, S.G., inzh.; POPOV, V.P., inzh.; SHTEFAN, V.Ye., inzh.

Operation of once-through wet-slagging boilers on anthracite culm. Elek. sta. 29 no.4:7-11 Ap '58. (MIRA 11:8)
(Boilers)

APPROVED FOR RELEASE: 09/19/2001 CIA-RDP86-00513R001032420006-3"

"APPROVED FOR RELEASE: 09/19/2001 CIA-RDP86-00513R001032420006-3

MARKIN, S.G.

Mass movement for communist labor. Mashinostroitel' no.1:26-27 Ja '61. (MIRA 14:3)

(Efficiency, Industrial)

APPROVED FOR RELEASE: 09/19/2001 CIA-RDP86-00513R001032420006-3"

"APPROVED FOR RELEASE: 09/19/2001 CIA-RDP86-00513R001032420006-3

MARKIN, S. P.: Master Med Sci (diss) -- "Changes in the [illegible] of the blood serum of cancer patients under the influence of [illegible]". Moscow, 19[illegible]. 1[illegible] pp (Min Health USSR, Moscow Med Stomatological Inst), copies (KL, No [illegible], 19[illegible], 1[illegible])

APPROVED FOR RELEASE: 09/19/2001 CIA-RDP86-00513R001032420006-3"

"APPROVED FOR RELEASE: 09/19/2001 CIA-RDP86-00513R001032420006-3

MARKIN, S.P. (Moskva)

Effect of hemotherapy on carcinolytic properties of serum in cancer patients [with summary in English]. Pat.fiziol. i eksp. terap. 2 no.3:31-36 My-Je '58 (MIRA 11:7)

1. Iz TSentral'nogo ordena Lenina instituta gematologii i perelivaniya krovi (direktor - deystvitel'nyy chlen AMN SSSR prof. A.A. Bagdasarov).

(NEOPLASMS, blood in,
carcinolytic properties, eff. of hemother. (Rus))
(SEROTHERAPY,
hemother., eff. on carcinolytic properties of serum in cancer patients (Rus))
(BLOOD,
antitumor properties, eff. of hemother. (Rus))

APPROVED FOR RELEASE: 09/19/2001 CIA-RDP86-00513R001032420006-3"

"APPROVED FOR RELEASE: 09/19/2001 CIA-RDP86-00513R001032420006-3

TIKHONOVICH, G.S., kand.med.nauk; MARKIN, S.P.

Clinical aspects of Hirschprung's disease. Terap.arkh. no.6: 56-60 '62. (MIRA 15:9)

1. Iz 1-y kafedry terapii (zav. - prof. A.Z. Chernov) i 1-y kafedry khirurgii (zav. - prof. B.S. Romanov) TSentral'nogo instituta usovershenstvovaniya vrachey.
(COLON--ABNORMITIES AND DEFORMITIES)

APPROVED FOR RELEASE: 09/19/2001 CIA-RDP86-00513R001032420006-3"

"APPROVED FOR RELEASE: 09/19/2001 CIA-RDP86-00513R001032420006-3

DYUSKALIYEV, D.D.; MARKIN, S.F., kand. med. nauk

Fat metabolism in dumping syndrome patients and its changes following gastrojejunoduodenoplasty. Khirurgiia 40 no.8:43-49 Ag '64. (MIRA 18:3)

1. Kafedra meditsinskoy radiologii (zav. - prof. V.K. Modestov) i 1-ya kafedra khirurgii (zav. - prof. B.S. Rozanov) TSentral'nogo instituta usovershenstvovaniya vrachey i Klinicheskoy ordena Lenina bol'nitsy imeni Botkina (glavnyy vrach - dotsent Yu.G. Antonov), Moskva.

APPROVED FOR RELEASE: 09/19/2001 CIA-RDP86-00513R001032420006-3"

"APPROVED FOR RELEASE: 09/19/2001 CIA-RDP86-00513R001032420006-3

MARKIN, S.P., kand. med. nauk; NIKITINA, R.G.

Preliminary report on the results of the study of the functional state of the liver with the aid of I^{131}-tagged rose bengal in surgical patients. Trudy TSIU 71:189-193 '64. (MIRA 18:6)

1. Kafedra khirurgii (zav. prof. zasluzhennyy deyatel' nauki R.S. Rozanov) i kafedra meditsinskoy radiologii (zav. prof. V.K. Modestov) TSentral'nogo instituta usovershenstvovaniya vrachey.

APPROVED FOR RELEASE: 09/19/2001 CIA-RDP86-00513R001032420006-3"

"APPROVED FOR RELEASE: 09/19/2001 CIA-RDP86-00513R001032420006-3

PUSHKIN, P.S., kand.tekhn.nauk, dotsent; YAKIMENKO, A.D., inzh.; CHEMBAROV, M.I., inzh.; MARKIN, S.S., inzh.; PARASHIRA, T.G., inzh.; ALEKSEYEVA, N.N., inzh.; POLYAKOVA, L.N., inzh.

Labor productivity potentials and growth factors in the artificial leather industry during the current seven year period. Izv.vys.ucheb.zav.;tekh.leg.prom. no.2:31-38 '62. (MIRA 15:5)

1. Vsesoyuznyy nauchno-issledovatel'skiy institut plenochnykh materialov i iskusstvennoy kozhi. Rekomendovana kafedroy ekonomiki promyshlennosti i organizatsii proizvodstva Kiyevskogo tekhnologicheskogo instituta [redacted] promyshlennosti.
(Leather industry--Labor productivity)

APPROVED FOR RELEASE: 09/19/2001 CIA-RDP86-00513R001032420006-3"

"APPROVED FOR RELEASE: 09/19/2001 CIA-RDP86-00513R001032420006-3

[illegible], [illegible] Cand [illegible] -- [illegible] "[illegible] of the [illegible] steels [illegible] rolling [illegible] press-molding [illegible]." [illegible] Tsv [illegible] [illegible], 19[illegible]. [illegible] [illegible] (Dissertation [illegible] [illegible] [illegible]) [illegible]

[illegible] KL, [illegible], [illegible]

APPROVED FOR RELEASE: 09/19/2001 CIA-RDP86-00513R001032420006-3"

"APPROVED FOR RELEASE: 09/19/2001 CIA-RDP86-00513R001032420006-3

L 27702-66 JT

ACC NR: AP6016407 SOURCE CODE: UR/0286/65/000/017/0069/0069

22
B

INVENTOR: Markin, S. V.; Prosvirin, K. V.

ORG: Central Scientific Research Institute of Technology and Machine Building (Tsentral'nyy nauchno-issledovatel'skiy institut tekhnologii i mashinostroyeniya)

TITLE: Die steel. Class 40, No 174367

SOURCE: Byulleten' izobreteniy i tovarnykh znakov, no. 17, 1965, 69

TOPIC TAGS: die, steel, solid mechanical property

ABSTRACT: A new die steel with improved mechanical properties is proposed which has the following chemical composition: 0.4-0.5 C, 0.4-0.6 Si, 0.4-0.6 Mn, 2.0-2.5 Cr, 0.8-1.2 Mo, 1.8-2.5 W, 0.6-0.8 V, 0.03 S, 0.03 P. [JPRS]

SUB CODE: 11, 13, 20 / SUBM DATE: none

Card 1/1 UDC: 669.14.018.254

APPROVED FOR RELEASE: 09/19/2001 CIA-RDP86-00513R001032420006-3"

"APPROVED FOR RELEASE: 09/19/2001 CIA-RDP86-00513R001032420006-3

MARKIN, S.V.

Technical specifications for rolling-mill rolls. Standartizatsiia 24 no.11:32-35 N '60. (MIRA 13:11)
(Rolls (Iron mills)--Standards)

APPROVED FOR RELEASE: 09/19/2001 CIA-RDP86-00513R001032420006-3"

"APPROVED FOR RELEASE: 09/19/2001 CIA-RDP86-00513R001032420006-3

MARKIN, S.V., kand. tekhn. nauk; KRICHEVSKIY, Ya.M., red.; KOVAL'SKAYA, I.F., tekhn. red.

[Manufacture and use of steel rolls for structural and merchant mills; survey] Proizvodstvo i primenenie stal'nykh valkov dlia sortovykh stanov; obzor. Moskva, TSentrl in-t nauchno-tekhn. informatsii mashinostroeniia, 1961. 37 p. (MIRA 14:11)

(Rolls (Iron mills))

APPROVED FOR RELEASE: 09/19/2001 CIA-RDP86-00513R001032420006-3"

"APPROVED FOR RELEASE: 09/19/2001 CIA-RDP86-00513R001032420006-3

L 64371-65 EWT(d)/EWT(m)/EWP(w)/EWA(d)/EWP(v)/T/EWP(t)/EWP(k)/EWP(h)/EWP(z)/EWP(b)/EWP(1) MJW/JD

ACCESSION NR: AP5018543 UR/0182/65/000/007/0001/0005
621.984.5

AUTHORS: Markin, S. V.; Prosvirin, K. V.; Shevelev, A. Ye.

TITLE: New high strength die steels for hot forming

SOURCE: Kuznechno-shtampovochnoye proizvodstvo, no. 7, 1965, 1-5

TOPIC TAGS: die steel, tool steel, steel alloy, steel property/ 45Kh2SV2MF steel alloy, 40Kh2SVMFYu steel alloy, 3KhV4SF steel alloy, 25Kh2M2FIN steel alloy, 3Kh2V8 steel alloy, 4Kh2V5FM steel alloy

ABSTRACT: Results are presented of laboratory and industrial tests of die steels 40Kh2SVMFYu and 45Kh2SV2MF developed by the authors based on steels 3KhV4SF, 4Kh2V5FM and 25Kh2M2FIN. Seven different alloys (12 kg of each) were prepared and tested at the Moskovskiy avtozavod im. Likhacheva (Moscow Motorcar Factory) as dies for hot forging of automobile valves made of 40Kh steel. After testing these seven alloys, five new alloys (based on the previous results) were prepared and tested. It was found that steels 40Kh2SVMFYu (0.43% C, 0.5 Si, 0.5 Mn, 2.8 Cr, 1.28 W, 0.9 Mo, 0.71 V, 0.6 Al) and 45Kh2SV2MF (same as previous except 2.53% W, 0.97 Mo, 0.73 V, 0.0 Al, 0.5 C) were most durable, having the following physical properties respectively: at 200 - σ_b = 186 and 205 kg/mm^2, a_k = 3.2, 3.0 kgm/cm^2; at 450C -

Card 1/2

APPROVED FOR RELEASE: 09/19/2001 CIA-RDP86-00513R001032420006-3"

"APPROVED FOR RELEASE: 09/19/2001 CIA-RDP86-00513R001032420006-3

L 64371-65

ACCESSION NR: AP5018543

3

σ_b = 164, 178, σ_s = 149, 159, ψ = 8.6, 14.2%, δ = 4.6, 5.0%, a_k = 4.3, 3.1; at 650C - 102, 88; 85, 83; 43, 37; 8.7, 7.0; 4.5, 4.3 for σ_b, σ_s, ψ, δ, a_k respectively (after quenching in oil from 1100C and two-hour annealing at 580C). Hardness after nitriding was found to be 340 and 363 RC at 650C and 187 and 187 RC at 700C [Abstracter's Note: These values seem unreasonable but are given in Table 6 in the paper] These steels were found to be superior to steel 3Kh2V8 which is 2-3 times more expensive than the experimental alloys. Orig. art. has: 6 tables and 2 figures.

ASSOCIATION: none

SUBMITTED: 00 ENCL: 00 SUB CODE: MM

NO REF SOV: 000 OTHER: 000

llc

Card 2/2

APPROVED FOR RELEASE: 09/19/2001 CIA-RDP86-00513R001032420006-3"

"APPROVED FOR RELEASE: 09/19/2001 CIA-RDP86-00513R001032420006-3

L 2774-66 EWT(m)/EWA(d)/EWP(t)/EWP(k)/EWP(z)/EWP(b)/EWA(h)/EWA(c)/ JD/HW

ACCESSION NR: AP5022012 UR/0286/65/000/014/0080/0080
669.14.08.258

49
B

AUTHOR: Markin, S. V.; Tutov, I. Ye.; Prosvirin, K. V.; Shevelev, A. Ye.; Belkov, G. M.; Zemnukhov, I. F.

TITLE: A steel for pressing. Class 40, No. 173007

SOURCE: Byulleten' izobreteniy i tovarnykh znakov, no. 14, 1965, 80

TOPIC TAGS: alloy steel, tungsten steel, chromium steel

ABSTRACT: This Author's Certificate introduces a steel for pressing which contains carbon, silicon, manganese, chromium, molybdenum, vanadium, tungsten and aluminum. The mechanical properties of the steel are improved by using the following composition (in %): 0.37-0.45 carbon; 0.4-0.6 silicon; 0.5-0.7 manganese, 2.5-3.0 chromium; 0.9-1.2 molybdenum; 0.6-0.8 vanadium; 1.0-1.4 tungsten; 0.4-0.6 aluminum.

ASSOCIATION: Tsentral'nyy nauchno-issledovatel'skiy institut tekhnologii i mashinostroyeniya (Central Scientific Research Institute of Technology and Machine Building)

SUBMITTED: 07Feb64 ENCL: 00 SUB CODE: MM

NO REF SOV: 000 OTHER: 000

Card1/1

APPROVED FOR RELEASE: 09/19/2001 CIA-RDP86-00513R001032420006-3"

"APPROVED FOR RELEASE: 09/19/2001 CIA-RDP86-00513R001032420006-3

MARKIN, V.

How to eliminate "bald spots"? Za bezop.dvizh. 5 no.2:11 F '63. (MIRA 16:2)

(Tires, Rubber)

APPROVED FOR RELEASE: 09/19/2001 CIA-RDP86-00513R001032420006-3"

"APPROVED FOR RELEASE: 09/19/2001 CIA-RDP86-00513R001032420006-3

ZUBAREV, V.N., kand.tekhn.nauk; MARKIN, V.A., inzh.

Id-diagram of moist air for pressures of 1 to 15 kg./cm.^{2}
Teploenergetika 8 no.7:50-53 Jl '61. (MIRA 14:9)

1. Moskovskiy energiticheskiy institut.
(Compressed air tables, calculations, etc.)

APPROVED FOR RELEASE: 09/19/2001 CIA-RDP86-00513R001032420006-3"

"APPROVED FOR RELEASE: 09/19/2001 CIA-RDP86-00513R001032420006-3

MARKIN, V.A.; AVSYUK, G.A., otv.red.; OGANOVSKIY, P.N., red.

[Franz Josef Land; meteorology] Zemlia Frantsa-Iosifa; meteorologiia. Moskva. (Materialy gliatsiologicheskikh issledovanii). No.3. [Actinometric observations] Aktinometricheskie nabliudeniia. 1960. 134 p. No.4. [Actionometric observations] Aktinometricheskie nabliudeniia. 1960. 148 p.

(MIRA 14:3)

1. Akademiya nauk SSSR. Institut geografii.
(Franz Josef Land--Solar radiation)

APPROVED FOR RELEASE: 09/19/2001 CIA-RDP86-00513R001032420006-3"

"APPROVED FOR RELEASE: 09/19/2001 CIA-RDP86-00513R001032420006-3

MARKIN, V.A.

Aureole on Franz Joseph's Land. Priroda 49 no.9:108-109 S '60. (MIRA 13:10)

1. Institut geografii AN SSSR, Moskva.
(Optical illusions)

APPROVED FOR RELEASE: 09/19/2001 CIA-RDP86-00513R001032420006-3"

"APPROVED FOR RELEASE: 09/19/2001 CIA-RDP86-00513R001032420006-3

AUTHOR: Markin, V

TITLE: Actinometric [illegible]

PERIODICAL: Referativnyy [illegible]

TEXT: In [illegible] AN SSSR (Institute of Geography, A[illegible]) [illegible] tric observations [illegible] land, 80°[illegible]N [illegible] 24-hour periods. [illegible] mean cloudiness [illegible] the cloudiness [illegible] fog on the dome in [illegible]

Card 1/3

APPROVED FOR RELEASE: 09/19/2001 CIA-RDP86-00513R001032420006-3"

"APPROVED FOR RELEASE: 09/19/2001 CIA-RDP86-00513R001032420006-3

Acti[illegible]

For [illegible]
(17% [illegible]
being negative [illegible]

amount[illegible]
[illegible]

smaller [illegible]
on a h[illegible]

[illegible]
summary [illegible]
tered [illegible]
at [illegible]
[illegible]
dry sn[illegible]
The mean [illegible]
of [illegible]
it is [illegible]

Card

APPROVED FOR RELEASE: 09/19/2001 CIA-RDP86-00513R001032420006-3"

"APPROVED FOR RELEASE: 09/19/2001 CIA-RDP86-00513R001032420006-3

A[illegible] [illegible] D

[illegible] k [illegible]ories/cm^2 [illegible] in [illegible]

[illegible] Its yearly [illegible] k [illegible]
[illegible] the year (September-A[illegible]

is negative [illegible] k calories/cm^2 for the [illegible] months [illegible]
positive balance was sometimes [illegible] vasions, even at the time of the [illegible] night. The [illegible]
balance is positive ([illegible] k calories/cm^2) for 4 months [illegible]
year (May-August). The yearly total of the radiation [illegible]
amounted to 2.0 k calories/cm^2. [Abstracter's note [illegible]
translation.]

Card 3/3

APPROVED FOR RELEASE: 09/19/2001 CIA-RDP86-00513R001032420006-3"

"APPROVED FOR RELEASE: 09/19/2001 CIA-RDP86-00513R001032420006-3

S/169/61/[illegible]
[illegible]

AUTHOR: Markin, V. A.

TITLE: The albedo of the glaciers of Fran[illegible] Land and its role in the radiation [illegible] the archipelago

PERIODICAL: Referativnyy zhurnal, Geofizika, [illegible] 63 abstract [illegible]V444 (V sb, Glyat[illegible] vaniya no. [illegible] M[illegible] AN SSSR [illegible]

TEXT: Actinometric observations were [illegible] by the glaciologic expedition of the Institute [illegible] (Institute of Geography, AS USSR). The albedo (A[illegible] at the Kupol Churiyanisa station (3[illegible] m zone of [illegible] tation) and en route. At the same time on Kheys Is[illegible] GUSMP observatory undertook observations on ice-free [illegible] snow cover with a mean albedo of 0.[illegible] exists in the [illegible] alimentation for 10 [illegible] months of the year. Only in [illegible]

Card 1/3

APPROVED FOR RELEASE: 09/19/2001 CIA-RDP86-00513R001032420006-3"

"APPROVED FOR RELEASE: 09/19/2001 CIA-RDP86-00513R001032420006-3

The [illegible]

[illegible]

APPROVED FOR RELEASE: 09/19/2001 CIA-RDP86-00513R001032420006-3"

"APPROVED FOR RELEASE: 09/19/2001 CIA-RDP86-00513R001032420006-3

Card

APPROVED FOR RELEASE: 09/19/2001 CIA-RDP86-00513R001032420006-3"

"APPROVED FOR RELEASE: 09/19/2001 CIA-RDP86-00513R001032420006-3

MARKIN, V.A.; AVSYUK, G.A.; OGANOVSKIY, P.N., red.

[Franz Josef Land: Meteorology]Zemlia Frantsa-Iosifa: Meteorologiia. Moskva, (Its: Materialy gliatsiologicheskikh issledovanii) No.5.[Gradient observations]Gradientnye nabliudeniia. 1962. 179 p. (MIRA 16:3)

1. Akademiya nauk SSSR. Institut geografii.
(Franz Josef Land--Meteorology--Observations)

APPROVED FOR RELEASE: 09/19/2001 CIA-RDP86-00513R001032420006-3"

"APPROVED FOR RELEASE: 09/19/2001 CIA-RDP86-00513R001032420006-3

MARKIN, V.A.

Basic features of the radiation regime of glaciers on Franz Josef Land. Meteor. i gidrol. no.2:23-27 F '62. (MIRA 15:2)
(Franz Josef Land--Albedo)

APPROVED FOR RELEASE: 09/19/2001 CIA-RDP86-00513R001032420006-3"

"APPROVED FOR RELEASE: 09/19/2001 CIA-RDP86-00513R001032420006-3

MARKIN, Vyacheslav Alekseyevich; AVSYUK, G.A., otv. red.;
BOL'SHAKOV, V.P., red.izd-va; GUSEVA, A.F., tekhn.red.

[In the land of glacial domes] V strane ledianykh kupolov.
Moskva, Izd-vo AN SSSR, 1963. 180 p. (MIRA 17:2)

APPROVED FOR RELEASE: 09/19/2001 CIA-RDP86-00513R001032420006-3"

"APPROVED FOR RELEASE: 09/19/2001 CIA-RDP86-00513R001032420006-3

MARKIN, V.A.; SUKHODROVSKIY, V.L.

Recent data on the contemporaneous glaciation of Franz Josef Land. Dokl. AN SSSR 148 no.3:658-660 Ja '63. (MIRA 16:2)

1. Institut geografii AN SSSR. Predstavleno akademikom D.I. Shcherbakovym.
(Franz Josef Land—Glaciers)

APPROVED FOR RELEASE: 09/19/2001 CIA-RDP86-00513R001032420006-3"

"APPROVED FOR RELEASE: 09/19/2001 CIA-RDP86-00513R001032420006-3

MARKIN V.B.

PHASE I BOOK EXPLOITATION SOV/5452

Donskoy, Ya. Ye., G.I. Kardash, and I.P. Lyalyuk, eds.

Mekhanizatsiya i avtomatizatsiya; sbornik statey ob opyte vnedreniya mekhanizatsii i avtomatizatsii na khar'kovskikh mashinostroitel'nykh zavodakh (Mechanization and Automation, Collection of Articles on the Introduction of Mechanization and Automation in Khar'kov Machinery-Manufacturing Plants) [Khar'kov] Khar'kovskoye knizhnoye izd vo, 1960. 373 p. 3,900 copies printed.

Editorial Board: S.A. Vorob'yev, Candidate of Technical Sciences, Chairman of the Editorial Board; P.I. Zmaga, Engineer, A.A. Kublov, Engineer, V.I. Kuzubov, Engineer, A. Ye. Lesnov, Docent, A.I. Tupitsyn, Candidate of Technical Sciences, and S.M. Khmara, Candidate of Technical Sciences, Eds.: Ya. Ye. Donskoy, G.I. Kardash, and I.P. Lyalyuk, Tech. Ed.: M.I. Limanova.

PURPOSE: This collection of articles is intended for technical and scientific personnel, outstanding workers, and shock workers of communist labor.

COVERAGE: The multifaceted experience of Khar'kov enterprises in the mechanization, automation, and improvement of manufacturing processes is generalized. The development of new machines, instruments, and production methods is considered and attention is given to newly established enterprises, and to the introduction of telemechanics in the Khar'kov gas-system management. By including concrete examples and facts, the authors of the various articles attempt to demonstrate the achievements of the Khar'kov industrial complex in fulfilling the resolutions of the June (1959) and July (1960) Plenums of the Central Committee of the Communist Party of the Soviet Union. No personalities are mentioned. There are no references.

TABLE OF CONTENTS:

Shubenko Shubin, L.A. [Corresponding Member of the Academy of Sciences of the UkrSSR, Chief Designer of the Khar'kovskiy turbinnyy zavod -- Khar'kov Turbine Plant]. The Development of Steam Turbine Building at the Khar'kov Turbine Plant imeni Kirov 79

Berezin, S.I. [Chief Engineer of the Khar'kov Turbine Plant imeni Kirov], and V.A. Boskov [Deputy Chief Process Engineer]. Experience in Mechanization and Automation 101

Naydenov, V.N. [Chief Engineer of the Khar'kovskiy elektromekhanicheskiy zavod -- Khar'kov Electromechanical Plant], and N. Ya. Polisskiy [Deputy Chief Plant Engineer]. Full Mechanization and Automation at the KhEMZ 117

SOV/5452

Mechanization and Automation (Cont.)

Zel'vyanskiy, F.B., and M.G. Vishnevskiy [Engineers]. The Experimental Model Shop of the Khar'kovskiy podshipnikovyy zavod (Khar'kov Bearing Plant) 128

Stepanov, S.F. [Deputy Chief Engineer of the Khar'kovskiy stankozavod -- Khar'kov Machine Tool Plant], and I.T. Frantsuzov [Chief Designer]. Automatic and Semiautomatic Grinding Machines 141

Kas'yanov, O.N., S. Ye. Shvartsman, and I.M. Zil'berberg [Engineers]. Automatic Unit-Head Machine Tools 158

Mangubi, V.A., and V.G. Ko[illegible] [Engineers]. What is Accomplished at the "Elektrostanok" Plant 174

Korkhov, F.K. [Chief Engineer of the KhPLZ]. Automatic [Production] Lines for Stamping Stator and Rotor Sheets 181

Zil'ber, A.I. [Chief Process Engineer of the "Svet shakhtera" Plant]. For Mechanization in Coal Mining 197

Card 4/5

APPROVED FOR RELEASE: 09/19/2001 CIA-RDP86-00513R001032420006-3"

"APPROVED FOR RELEASE: 09/19/2001 CIA-RDP86-00513R001032420006-3

Mechanization and Automation (Cont.) SOV/5452

Radchenko, S.G. [Chief Engineer of the Khar'kovskiy velosipednyy zavod--Khar'kov Bicycle Plant]. Mechanization and Automation in Bicycle Manufacturing 207

Yusefov, V.I. [Chief Engineer of the "Fuchkabel'" Plant]. Experience in Technological Progress 225

Trinchenko, P.S. [Director of the "Krasnyy Oktyabr'" Plant]. We Are Improving Machine Quality 232

Kucherov, P.M. [Director of the Khar'kovskiy zavod konditsionerov - Khar'kov Conditioner Plant]. New Technology in the Building of [Air] Conditioners 239

Belostotskiy, A.F. [Director of the "Pershen'" Plant]. Carburizing Steel Parts With Natural Gas 251

Mechanization and Automation (Cont.) SOV/5452

Ulischenko, F.U. [Chief Engineer of the Khar'kovskiy zavod torgovogo mashinostroyeniya - Khar'kov Commercial Machine Building Plant]. The Mechanization and Automation of Labor-Consuming Processes 261

Markin, V.D. [Secretary of the Comintern Rayon Committee of the Communist Party of the Ukraine]. The Party Organization in the Struggle for Technological Progress 268

Chervov, V.G. [Director of the Division of Science and Culture of the Oblast Committee of the Communist Party of the Ukraine]. The Scientists of Khar'kov -- [Their Contributions] to Production 279

Semko, M.F. [Director of the Khar'kovskiy politekhnicheskiy institut imeni V.I. Lenina -- Khar'kov Polytechnical Institute imeni V.I. Lenin; Professor]. Strengthening and Broadening Creative Collaboration Between Scientific and Production Workers 28[illegible]

Didenko, K.I. [Chief Designer of the Khar'kov Plant KIP]. A New Apparatus for the Automation of Manufacturing Processes 298

Mechanization and Automation (Cont.) SOV/5452

Savchenko, V.A. [Candidate of Technical Sciences], and V.I. Trubilko [Engineer]. Manual and Semiautomatic Electroslag Welding 317

Tsekov, V.I. [Candidate of Technical Sciences], and P.G. Kofman [Engineer] [Institut inzhenerov kommunal'nogo stroitel'stva -- Institute of Municipal-Construction Engineers]. The Mechanization of Operations in Trolley-Bus Repair 326

Ivaschenko, V.I., I.F. Marov, D.P. Gramatenko, and M.A. Duel' [Engineers]. Technological Progress in the Khar'kov Power System 340

Svet, I. Sh. [Engineer, Tractor Plant imeni S. Ordzhonikidze]. Automating the Pressworking of Parts, With High-Frequency Induction Heating 359

Venediktov, N.A. [Chief Engineer for the Upravleniye gazovogo khozyaystva -- Administration of the Gas Supply Service]. The Application of Telemechanics in the Khar'kov Gas Supply Service 36[illegible]

Mechanization and Automation (Cont.) SOV/5452

Tumanov, A.G. [Chief of the Administration of the Gas Industry of the Khar'kov Sovnarkhoz]. The Introduction of New Technology and Processes in Gas Production 371

AVAILABLE: Library of Congress (TJ1[illegible])

APPROVED FOR RELEASE: 09/19/2001 CIA-RDP86-00513R001032420006-3"

"APPROVED FOR RELEASE: 09/19/2001 CIA-RDP86-00513R001032420006-3

MARKIN, V. F. PA 248T85

USSR/Engineering - Automatic Control Dec 52
Gas Turbines

"Certain Problems of Regulating Gas Turbines," Cand Tech Sci V. F. Markin, Moscow Power Eng Inst

Iz V-S Teplotekh Inst, No 12, pp 7-12

Investigates dynamics of regulation process for 2 gas turbine installations: single-shaft plant with noncontrolled air consumption and two-shaft plant with controlled air consumption and with stage combustion. For sake of simplicity both plants were considered without regeneration.

248T85

APPROVED FOR RELEASE: 09/19/2001 CIA-RDP86-00513R001032420006-3"

"APPROVED FOR RELEASE: 09/19/2001 CIA-RDP86-00513R001032420006-3

APPROVED FOR RELEASE: 09/19/2001 CIA-RDP86-00513R001032420006-3"

"APPROVED FOR RELEASE: 09/19/2001 CIA-RDP86-00513R001032420006-3

MIZERI, A.A., dots., kand. tekhn. nauk; MARKIN, V.F.; KLIMCHUK, A.V.

Cermet bearings with capillary lubrication for automatic looms. Tekst. prom. 19 no.5:51-55 My '59. (MIRA 12:10)

1.Moskovskiy tekstil'nyy institut (for Mizeri). 2.Glavnyy konstruktor Klimovskogo mashinostroitel'nogo zavoda (for Markin). 3.Glavnyy mekhanik Novotkatskoy fabriki Glukhovskogo khlopchatobumazhnogo kombinata (for Klimchuk).
(Looms)

APPROVED FOR RELEASE: 09/19/2001 CIA-RDP86-00513R001032420006-3"

"APPROVED FOR RELEASE: 09/19/2001 CIA-RDP86-00513R001032420006-3

S/096/63/000/003/006/010
E194/E455

AUTHORS: Markin, V.F., Candidate of Technical Sciences, Gutkin, I.A., Engineer, Kostyuk, A.G., Candidate of Technical Sciences, Shifrin, Ye.L., Engineer

TITLE: The influence of transient heat-exchange on the process of regulating gas-turbine sets

PERIODICAL: Teploenergetika, no.3, 1963, 38-42

TEXT: In governing a gas turbine it is not the amount of gas flow which is regulated (as is the case in a steam turbine) but the amount of heat applied to the flow. Under steady-state conditions a steady temperature distribution is achieved between the various parts of the gas duct and the gas flowing through it. However, under transient conditions, the gas duct may either give up heat to the gas or extract heat from it, thus temporarily modifying the influence of the regulator. This effect can be of considerable practical significance. The differential equation for a gas-turbine regenerator is derived in the form

$$\frac{d\theta}{dz} = \frac{\mu}{\tau_\mu} + \frac{\theta}{\tau_\theta} + \frac{\nu}{\tau_\nu} + \frac{\rho}{\tau_\rho} \qquad (8)$$

Card 1/3

APPROVED FOR RELEASE: 09/19/2001 CIA-RDP86-00513R001032420006-3"

"APPROVED FOR RELEASE: 09/19/2001 CIA-RDP86-00513R001032420006-3

where $\theta = \Delta T_e/T_{e\,o}$; $\mu = \Delta B/B_o$; $\nu = \Delta G/G_o$; $\rho = \Delta\varepsilon/\varepsilon_o$; T_e - air temperature beyond regenerator, °K; B - rate of fuel consumption; G - rate of air consumption, ε - compression ratio. This equation was used to calculate the effect when a turbine picks up load and it is shown that because of transient cooling in the regenerator the temporary loss of output is greater than it otherwise would be. The problem cannot be overcome by increasing the regulator speed but a solution may be achieved by temporary over-regulation. The device used by the "Ekonomayzer" Works to achieve such temporary over-regulation of a gas turbine type ГТУ-6 (GTU-6) is then described. In basic principle there is only one fuel-control valve, which over-travels in the first stage of the transient process and gradually returns to the correct setting. Two servo-motors are used in the regulator. Comparative test results on a gas turbine type GTU-6 with the normal regulator and with this special one are quoted for cases of picking up and throwing off 100% load. There is a substantial improvement in performance with the new regulator. The use of temporary over-regulation avoids the need to alter the

APPROVED FOR RELEASE: 09/19/2001 CIA-RDP86-00513R001032420006-3"

"APPROVED FOR RELEASE: 09/19/2001 CIA-RDP86-00513R001032420006-3

static characteristics of the regulation system; perfection has not yet been achieved but further improvement is possible. It should be noted that a regenerator does not always distort the transient process, but only in such cases when at different loads the temperature gradient between the regenerator wall and gas changes markedly. The greatest change occurs in gas turbines in which a compressor of flat characteristic runs at approximately constant speed. The main criterion in assessing the probable influence of the regenerator on the transient process is the gas temperature beyond the turbine. The more this changes on change of load the greater the influence of the regenerator on the transient process. There are 5 figures.

ASSOCIATION: Moskovskiy energeticheskiy institut - zavod "Ekonomayzer" (Moscow Power Engineering Institute - "Ekonomayzer" Works)

APPROVED FOR RELEASE: 09/19/2001 CIA-RDP86-00513R001032420006-3"

"APPROVED FOR RELEASE: 09/19/2001 CIA-RDP86-00513R001032420006-3

MARKIN, V.I., inzhener; SHAPOSHNIKOV, A.K., inzhener.

Technology of screening iron ores in blast-furnace plants.
Metallurg no.6:12-14 Je '56. (MLRA 9:9)

1.Chelyabinskiy metallurgicheskiy zavod.
(Iron ores) (Chelyabinsk--Blast furnaces)

APPROVED FOR RELEASE: 09/19/2001 CIA-RDP86-00513R001032420006-3"

"APPROVED FOR RELEASE: 09/19/2001 CIA-RDP86-00513R001032420006-3

APPROVED FOR RELEASE: 09/19/2001 CIA-RDP86-00513R001032420006-3"

"APPROVED FOR RELEASE: 09/19/2001 CIA-RDP86-00513R001032420006-3

MARKIN, Vasiliy Ivanovich [illegible]NYAGINA, V.V., redaktor; RA[illegible]VITSKIY, [illegible] tekhnicheskiy [illegible]

[Explanatory [illegible] e natural sciences [illegible] tary schools; a manual for teachers] Ob"iasnitel'noe chtenie po estes.voznaniiu v nachal'noi shkole; posobie dlia uchitelei. Izd. 2-oe, ispr. i dop. Leningrad, Gos.uchebno-pedagog. izd-vo M-va prosv. RSFSR. Leningr. otd-nie, 1957. 202 p. (MLRA 10:10)
(Nature study)

APPROVED FOR RELEASE: 09/19/2001 CIA-RDP86-00513R001032420006-3"

"APPROVED FOR RELEASE: 09/19/2001 CIA-RDP86-00513R001032420006-3

MARKIN, Vladimir Ivanovich, inzh.; KUTYLOVSKIY, Mikhail Petrovich, dotsent, kand.tekhn.nauk; MOROZOVA, G.F., red.; FEDOTOVA, A.F., tekhn.red.; PONOMAREVA, A.A., tekhn.red.

[Manual training in school shops; a textbook for teachers in grades five to seven of secondary schools] Prakticheskie zaniatiia v shkol'nykh uchebnykh masterskikh; uchebno-tekhnicheskoe posobie dlia prepodavatelei V-VII klassov srednei shkoly. Moskva, Gos. uchebno-pedagog. izd-vo M-va prosv. RSFSR, 1958. 391 p. (MIRA 12:2)

(Manual training)

APPROVED FOR RELEASE: 09/19/2001 CIA-RDP86-00513R001032420006-3"

"APPROVED FOR RELEASE: 09/19/2001 CIA-RDP86-00513R001032420006-3

MARKIN, V.K.

Communication apparatus at way stations. Avtom., telem.i sv.az' 4 no.3:32-33 Mr '60. (MIRA 13:7)

1. Zamestitel' nachal'nika Tul'skoy distantsii signalizatsii i svyazi Moskovskoy dorogi.
(Railroads--Communication systems)

APPROVED FOR RELEASE: 09/19/2001 CIA-RDP86-00513R001032420006-3"

"APPROVED FOR RELEASE: 09/19/2001 CIA-RDP86-00513R001032420006-3

MARKIN, V.K.

Improve the quality of the district communication systems. Avtom., telem. i sviaz' 5 no.4:28 Ap '61. (MIRA 14:6)

1. Zamestitel' nachal'nika Tul'skoy distantsii signalizatsii i svyazi Moskovskoy dorogi.
(Railroads—Communication systems)

APPROVED FOR RELEASE: 09/19/2001 CIA-RDP86-00513R001032420006-3"

"APPROVED FOR RELEASE: 09/19/2001 CIA-RDP86-00513R001032420006-3

MARKIN, V.K.

Automatic line and track communication. Avtom., telem. i svi-z' 7 no.12:37-39 D '63. (MIRA 17:[illegible]

1. Zamestitel' nachal'nika Tul'skoy distantsii signalizatsii i svyazi Moskovskoy dorogi.

APPROVED FOR RELEASE: 09/19/2001 CIA-RDP86-00513R001032420006-3"

"APPROVED FOR RELEASE: 09/19/2001 CIA-RDP86-00513R001032420006-3

MARKIN, V.N., [illegible]OBANOVA, C.A., [illegible] [illegible]eased

[illegible]ystal chem[illegible] [illegible] comp[illegible] [illegible]
Synthesis and [illegible] diffra[illegible] [illegible] [illegible]
[illegible]mpounds of vanadium [illegible] [illegible]

APPROVED FOR RELEASE: 09/19/2001 CIA-RDP86-00513R001032420006-3"

"APPROVED FOR RELEASE: 09/19/2001 CIA-RDP86-00513R001032420006-3

USHAKOVA, M.T.; YEFIMOV, A.Z.; MARKIN, V.P.

Use of industrial nicotinic acid in animal husbandry. Trudy VNIVI 8:79-82 '61. (MIRA 14:9)

1. Laboratoriya biologicheskikh ispytaniy i novykh form vitaminov Vsesoyuznogo nauchno-issledovatel'skogo vitaminnogo instituta.
(Nicotinic acid--Physiological effect) (Feeds)

APPROVED FOR RELEASE: 09/19/2001 CIA-RDP86-00513R001032420006-3"

"APPROVED FOR RELEASE: 09/19/2001 CIA-RDP86-00513R001032420006-3

MARKINA, V. P., dotsent

Cesarean section in the lower segment with suprapubic incision of the abdominal wall. Akush. i gin. no.2:68-73 '62. (MIRA 15:6)

1. Iz kafedry akusherstva i ginekologii (zav. - zasluzhennyy deyatel' nauki prof. V. A. Pokrovskiy) Voronezhskogo meditsinskogo instituta.

(CESAREAN SECTION)

APPROVED FOR RELEASE: 09/19/2001 CIA-RDP86-00513R001032420006-3"

"APPROVED FOR RELEASE: 09/19/2001 CIA-RDP86-00513R001032420006-3

VAYTSMAN, V.M., inzh.; VNUKOV, A.K., kand.tekhn.nauk; MARKIN, V.P., inzh.

Automation of the charging of fuel into ball mills. Elek.sta.29 no.3:85 Mr '58. (MIRA 11:5)
(Pulverizers)

APPROVED FOR RELEASE: 09/19/2001 CIA-RDP86-00513R001032420006-3"

"APPROVED FOR RELEASE: 09/19/2001 CIA-RDP86-00513R001032420006-3

NEVEL'SON, S.P., kand.tekhn.nauk; PROKOPENKO, A.G., inzh.; MARKIN, V.P., inzh.; SHUMSKAYA, L.S., kand.tekhn.nauk

Boiler and turbine unit with a 100-milliwatt power rating operatings under varying conditions. Elek.sta. no.7:5-15 Jl '60. (MIRA 13:8)

(Steam turbines) (Boilers) (Turbogenerators)

APPROVED FOR RELEASE: 09/19/2001 CIA-RDP86-00513R001032420006-3"

"APPROVED FOR RELEASE: 09/19/2001 CIA-RDP86-00513R001032420006-3

KOMOVALOV, G.M., inzh.; KIRSH, A.K., inzh.; MARKIN, V.P., inzh.

Economic aspects of the type VKT-100 steam turbine built at the Kharkov works. Teploenergetika 7 no.3:73-80 Mr '60. (MIRA 13:[illegible])

1. Gosudarstvennyy trest po organizatsii i ratsionalizatsii elektrostantsiy i Dneproenergo.
(Steam turbines)

APPROVED FOR RELEASE: 09/19/2001 CIA-RDP86-00513R001032420006-3"

"APPROVED FOR RELEASE: 09/19/2001 CIA-RDP86-00513R001032420006-3

NEVEL'SON, S.P., kand.tekhn.nauk; PROKOPENKO, A.G., inzh.; MARKIN, V.P., inzh.; TKRENKAL', V.R., inzh.

Thermal characteristics of a 100 megawatt turbine-boiler unit. Elek.sta. 31 no.5:6-11 My '60. (MIRA 13:8)

(Electric power plants—Equipment and supplies)

APPROVED FOR RELEASE: 09/19/2001 CIA-RDP86-00513R001032420006-3"

"APPROVED FOR RELEASE: 09/19/2001 CIA-RDP86-00513R001032420006-3

NEVEL'SON, S.P., kand.tekhn.nauk; MARKIN, V.P., inzh.; TERENKAL', V.R., inzh.

Certain thermal characteristics of the TP-7[illegible] boiler operating on natural gas in system with a turbine. Elek. sta. 31 no. 8:2-4 Ag '60. (MIRA 14:9)

(Boilers) (Steam turbines)

APPROVED FOR RELEASE: 09/19/2001 CIA-RDP86-00513R001032420006-3"

"APPROVED FOR RELEASE: 09/19/2001 CIA-RDP86-00513R001032420006-3

GUSEV, V.N., inzh.; MARKIN, V.P., inzh.; TERENKAL', V.R., inzh.; SHEYAKIN, P.A., inzh.

Adjustment and test results of the TP-70 boiler operating on natural gas. Energomashinostroenie 7 no.7:1-5 Jl '61. (MIRA 14:8)

(Boilers Testing)

APPROVED FOR RELEASE: 09/19/2001 CIA-RDP86-00513R001032420006-3"

"APPROVED FOR RELEASE: 09/19/2001 CIA-RDP86-00513R001032420006-3

PROKOPENKO, A.G., inzh.; LAZARENKO, A.V., inzh.; MARKIN, V.P., inzh.

Starting conditions and temperature state of the VKT-100 turbine. Teploenergetika 8 no.5:17-24 My '61. (MIRA 14:8)
(Steam turbines)

APPROVED FOR RELEASE: 09/19/2001 CIA-RDP86-00513R001032420006-3"

"APPROVED FOR RELEASE: 09/19/2001 CIA-RDP86-00513R001032420006-3

BERMAN, L.D., doktor tekhn.nauk; MARKIN, V.P., inzh.; PROKHOROVA, Ye.I., inzh.; IL'ICHEVA, L.A., inzh.

Use of double tube plates in steam turbine condensers. Teploenergetika 8 no.7:24-29 Jl '61. (MIRA 14:9)

1. Vsesoyuznyy teplotekhnicheskiy institut i Pridneprovskaya Gosudarstvennaya rayonnaya elektricheskaya stantsiya.
(Steam turbines) (Condensers (Steam))

APPROVED FOR RELEASE: 09/19/2001 CIA-RDP86-00513R001032420006-3"

"APPROVED FOR RELEASE: 09/19/2001 CIA-RDP86-00513R001032420006-3

SUCHKOV, V.I.; MARKIN, V.I., otv. red.

[Thermophysical values; reference data for the design of metallurgical furnaces. Teplofizicheskie velichiny: Spravochnye dannye dlia proektirovaniia metallurgicheskikh pechei. Sverdlovsk, Ural'skii politekhn. in-t S.M.Kirova, 1963. 38 p. (MIRA 17:7)

APPROVED FOR RELEASE: 09/19/2001 CIA-RDP86-00513R001032420006-3"

"APPROVED FOR RELEASE: 09/19/2001 CIA-RDP86-00513R001032420006-3

L 22563-66

ACC NR: AP6012931 SOURCE CODE: UR/0104/65/000/007/0007/0015

AUTHOR: Markin, V. P. (Engineer); Rtishchev, S. P. (Engineer); Yakovlev, G. G. (Engineer)

ORG: none

TITLE: Results of startup and adjusting operations on the 300 Mw power unit

SOURCE: Elektricheskiye stantsii, no. 7, 1965, 7-15

TOPIC TAGS: power plant component, steam boiler

ABSTRACT: Results are presented from startup and tuning of the 300 Mw power unit at the Pridneprovskiy power plant. All the main equipment as well as the greater part of the supplementary equipment are new models. The article describes the equipment in detail, presents the thermal plan of the unit, then goes on to describe the prestart operations, publication of documents for training of service personnel, checking and installation of equipment, preliminary testing, etc. Chemical cleaning of the equipment removed 7,000 kg of iron oxide from the boilers, etc. Graphs of the temperatures and pressures encountered versus time during the startup operations are presented. The authors recommend that chemical cleaning be accomplished in such equipment with high flow rates, that the steam pipes of the boiler be blown out with externally supplied steam. Flow reversal in individual coils was not fully

Card 1/2 UDC: 621.311.22.004

APPROVED FOR RELEASE: 09/19/2001 CIA-RDP86-00513R001032420006-3"

"APPROVED FOR RELEASE: 09/19/2001 CIA-RDP86-00513R001032420006-3

L 22563-66

ACC NR: AP6012931

eliminated. The authors call for further work in this direction. Considerable difficulties were encountered in firing the boiler after short time standing. Orig. art. has: 5 figures. [JPRS]

SUB CODE: 10, 13 / SUBM DATE: none

Card 2/2 BK

APPROVED FOR RELEASE: 09/19/2001 CIA-RDP86-00513R001032420006-3"

"APPROVED FOR RELEASE: 09/19/2001 CIA-RDP86-00513R001032420006-3

MARKIN, V. S.; PSHENICHNIKOV, A. G.; CHIZMADZHEV, I. A.; CHIRKOV, Yu. G.; BURSHTEYN, R. Kh.

"Investigation of the Relationship between the Structure and the Electrochemical Properties of a Porous Gas Electrode."

Report presented at the 14th meeting CITCE, Intl. Comm. of Electrochemical Thermodynamics and Kinetics, Moscow, 19-25 Aug 63.

Institute of Electrochemistry, Academy of Sciences of USSR.

APPROVED FOR RELEASE: 09/19/2001 CIA-RDP86-00513R001032420006-3"

"APPROVED FOR RELEASE: 09/19/2001 CIA-RDP86-00513R001032420006-3

MARKIN, V.S.

On the properties of interface boundary in one model of porous material. Izv. AN SSSR. Ser.khim. no.9:1690-1692 S '63. (MIRA 16:9)

1. Institut elektrokhimii AN SSSR.
(Porous materials) (Boundary layer)

APPROVED FOR RELEASE: 09/19/2001 CIA-RDP86-00513R001032420006-3"

"APPROVED FOR RELEASE: 09/19/2001 CIA-RDP86-00513R001032420006-3

MARKIN, V.S.

Capillary equilibrium in a model of branching pores with varying cross sections. Izv. AN SSSR. Ser. khim. no.11:1923-1933 N '63. (MIRA 17:1)

1. Institut elektrokhimii AN SSSR.

APPROVED FOR RELEASE: 09/19/2001 CIA-RDP86-00513R001032420006-3"

"APPROVED FOR RELEASE: 09/19/2001 CIA-RDP86-00513R001032420006-3

LEVICH, V.G.; MARKIN, V.S.; CHIRKOV, Yu.G.

Electric conductivity and electron paramagnetic resonance signal in polymeric materials built up of molecules with conjugate double bonds. Dokl. AN SSSR 149 no.4:894-896 Ap '63. (MIRA 16:3)

1. Institut elektrokhimii AN SSSR. 2. Chlen-korrespondent AN SSSR (for Levich).
(Polymers--Electric properties)
(Electron paramagnetic resonance and relaxation)

APPROVED FOR RELEASE: 09/19/2001 CIA-RDP86-00513R001032420006-3"

"APPROVED FOR RELEASE: 09/19/2001 CIA-RDP86-00513R001032420006-3

MARKIN, V.S.; CHIZMADZHEV, Yu.A.; CHIRKOV, Yu.G.

Theory of porous gas electrodes. Computation of effective coefficients. Dokl. AN SSSR 150 no.3:596-599 My '63. (MIRA 16:6)

1. Institut elektrokhimii AN SSSR. Predstavleno akademikom A.N. Frumkinym.

(Electrodes) (Porous materials)

APPROVED FOR RELEASE: 09/19/2001 CIA-RDP86-00513R001032420006-3"

"APPROVED FOR RELEASE: 09/19/2001 CIA-RDP86-00513R001032420006-3

MARKIN, V.S.

Capillary equilibrium in porous media. Report 1: Formulation of the problem and derivation of equations. Izv. AN SSSR. Ser. Khim. no.9:1523-1530 '65. (MIRA 18:9)

1. Institut elektrokhimii AN SSSR.

APPROVED FOR RELEASE: 09/19/2001 CIA-RDP86-00513R001032420006-3"

"APPROVED FOR RELEASE: 09/19/2001 CIA-RDP86-00513R001032420006-3

MARKIN, V.S.

[illegible]

1. [illegible]

APPROVED FOR RELEASE: 09/19/2001 CIA-RDP86-00513R001032420006-3"

"APPROVED FOR RELEASE: 09/19/2001 CIA-RDP86-00513R001032420006-3

MARKIN, V.S.

Capillary equilibrium in porous media. Report No.3: Characteristics of porous media. Izv. AN SSSR. Ser. khim. no.11:1967-1975 '65. (MIRA 18:11)

1. Institut elektrokhimii AN SSSR.

APPROVED FOR RELEASE: 09/19/2001 CIA-RDP86-00513R001032420006-3"

"APPROVED FOR RELEASE: 09/19/2001 CIA-RDP86-00513R001032420006-3

MYAMLIN, Viktor Alekseyevich; PLESKOV, Yuriy Viktorovich; MARKIN, V.S., red.

[Electrochemistry of semiconductors] Elektrokhimiia poluprovodnikov. Moskva, Nauka, 1965. 337 p. (MIRA 18:7)

APPROVED FOR RELEASE: 09/19/2001 CIA-RDP86-00513R001032420006-3"

"APPROVED FOR RELEASE: 09/19/2001 CIA-RDP86-00513R001032420006-3

MARKIN, V.S.; CHERMADZHEV, Yu.A.

Correlation function of the classical system of charged particles. Part 1: System of unipolar particles with a neutralizing background. Elektrokhimiia 1 no.10:1202-1211 O '65.

(MIRA 18:10)

1. Institut elektrokhimii AN SSSR.

APPROVED FOR RELEASE: 09/19/2001 CIA-RDP86-00513R001032420006-3"

"APPROVED FOR RELEASE: 09/19/2001 CIA-RDP86-00513R001032420006-3

APPROVED FOR RELEASE: 09/19/2001 CIA-RDP86-00513R001032420006-3"

"APPROVED FOR RELEASE: 09/19/2001 CIA-RDP86-00513R001032420006-3

SOV/86-58-9-36/42

AUTHOR: Markin, V. V., Lt Col, Hero of the Soviet Union, Military Pilot Second Class

TITLE: Change the Layout of Flight Instruments (Izmenit' komponovku pilotazhno-navigatsionnykh priborov)

PERIODICAL: Vestnik vozdushnogo flota, 1958, Nr 9, pp 85-86 (USSR)

ABSTRACT: The author recommends that certain changes be made in the layout of flight instruments on the instrument panel of fighter aircraft in order to facilitate the pilot's task during instrument flying. The author describes the necessary changes. One photo.

Card 1/1

APPROVED FOR RELEASE: 09/19/2001 CIA-RDP86-00513R001032420006-3"

"APPROVED FOR RELEASE: 09/19/2001 CIA-RDP86-00513R001032420006-3

MARKIN, V V

B

27

Progress in the Field of Chlorination of Hydrocarbons in the Past Ten Years. (In Russian.) L. S. Soloday and V. V. Markin. *Uspekhi Khimii* (Progress in Chemistry), v. 16, no. 1, 1947, p. 83-109.

A review. Emphasizes the work of Russian scientists. 130 ref.

ASB U.S.A. METALLURGICAL LITERATURE CLASSIFICATION

APPROVED FOR RELEASE: 09/19/2001 CIA-RDP86-00513R001032420006-3"

"APPROVED FOR RELEASE: 09/19/2001 CIA-RDP86-00513R001032420006-3

USSR/Organic Chemistry Synthetic Organic Chemistry. E-2

Abs Jour : Ref Zhur - Khimiya, No. 8, 1957, 26722.

Author : Klebanskiy, A L, Markin, V.V, Chevychalova, K K

Inst :

Title : Synthesis of Basis of 2,4-Dichlorobutene-2 Synthesis of Cyanamide Derivative, Binary Amine and Its Derivatives

Orig Pub : Zh. obshch khimii, 1956, 26, No 9, 2433 - 2435.

Abstract : The interaction between 2,4-dichlorobutene-2 (I) and CaNC≡N (II) in presence of an equivalent amount of NaOH results in the formation of di-(2-chlorobutene-2)-cyanamide (III), the following hydrolysis thereof produces di-(2-chlorobutene-2)-amine (IV) 155 g of I in

Card 1/3

APPROVED FOR RELEASE: 09/19/2001 CIA-RDP86-00513R001032420006-3"

"APPROVED FOR RELEASE: 09/19/2001 CIA-RDP86-00513R001032420006-3

USSR/Organic Chemistry. Synthet[illegible] Organic Chemistry. E-2

Abs Jour : Ref Zhur - Khimiya, [illegible], 1957, 26722

300 ml of alcohol (about 20°) are added to a solution of Na_2NH_2N (of 104 g of industrial 55% II, 310 ml of water, 75 g of ice and 165 g of 35% aqueous solution of NaOH), it is stirred 1.5 hours (cooling) and heated (about 100°) 3.5 hours, and 240 ml of alcohol is distilled off. The residue is cooled and washed with alcohol; the organic layer of the filtrate is separated and C_6H_6 is extracted from its aqueous solution. The yield of III is 55 - 60%, n^{20}_D = 1.5027, d_4^{20} = 1.1161, melting point 27 to 28° (from aqueous alcohol). A mixture of 120 g of III, 88 g of H_2SO_4 (d 1.84) and 258 ml of water is boiled 6 hours, filtered, dissociated with

Card 2/3

APPROVED FOR RELEASE: 09/19/2001 CIA-RDP86-00513R001032420006-3"

"APPROVED FOR RELEASE: 09/19/2001 CIA-RDP86-00513R001032420006-3

USSR/Organic Chemistry. Synthetic Organic Chemistry. E-2

Abs Jour : Ref Zhur - Khimiya, No 9, 1957, 26722

130 g of NaOH in 240 ml of water. IV, boiling point 104 105°/1 mm, $n^{20}D$ = 1.4977, d_4^{20} = 1.1[illegible]17, is received. IV is received also by the hydrolysis of crude III. Di-(2-chlorobutene-2) di thiocarbamates of sodium (V) or ammonium (VI) were received by condensation of IV with CS_2 in presence of aqueous solutions of NaOH or NH_3. 16 g of CS_2 and [illegible] of 18% aqueous solution of NaOH are added to IV, the yield of V is 87% (by iodometric titration). VI is received by the interaction of 20 g of IV, 8 g of CS_2 and 26 ml of aqueous solution of NH_3 (2.08 g of NH_3) (cooling), the yield is 81%

Card 3/3

APPROVED FOR RELEASE: 09/19/2001 CIA-RDP86-00513R001032420006-3"

"APPROVED FOR RELEASE: 09/19/2001 CIA-RDP86-00513R001032420006-3

MARKIN, V.V., Cand Geol-Min Sci -- (diss) "The Ordovician and Silurian of the western slope of the Polar Urals." Len, 1958, 21pp (Len Order of Lenin State Univ im A.A. Zhdanov) 150 copies. (KL, 44-58, 120)

APPROVED FOR RELEASE: 09/19/2001 CIA-RDP86-00513R001032420006-3"

"APPROVED FOR RELEASE: 09/19/2001 CIA-RDP86-00513R001032420006-3

MARKIN, Vasiliy Vasil'yevich; KUZNETSOV, S.S., prof., otv.red.; KULIKOV, M.V., red.izd-va; KRUGLIKOVA, N.A., tekhn.red.

[Ordovician and Silurian in the western slope of the Polar Urals] Ordovik i silur zapadnogo sklona Pripoliarnogo Urala. Moskva, Izd-vo Akad.nauk.SSSR, 1960. 131 p. (Akademiia nauk SSSR. Geologicheskii muzei. Trudy, no. 3) (MIRA 13:8)
(Ural Mountains--Geology, Stratigraphic)

APPROVED FOR RELEASE: 09/19/2001 CIA-RDP86-00513R001032420006-3"

"APPROVED FOR RELEASE: 09/19/2001 CIA-RDP86-00513R001032420006-3

MARKIN, V.V.

Ordovician in the western slope of the sub-Arctic Urals. Trudy Geol. muz. AN SSSR no.2:136-148 '60. (MIRA 13:10)
(Ural Mountains—Geology, Stratigraphic)

APPROVED FOR RELEASE: 09/19/2001 CIA-RDP86-00513R001032420006-3"

"APPROVED FOR RELEASE: 09/19/2001 CIA-RDP86-00513R001032420006-3

L 36473-66 EWT(m)/EWP(j) RM

ACC NR: AP6027040 SOURCE CODE: UR/0020/65/165/006/1313/1316

AUTHOR: Katayev, Ye. G.; Plemenkov, V. V.; Markin, V. V.
ORG: Kazan State University im. V. I. Ul'yanov-Lenin (Kazanskiy gosudarstvennyy universitet)

TITLE: Diethylphosphoric acid thionylamide in the diene synthesis reaction

SOURCE: AN SSSR. Doklady, v. 165, no. 6, 1965, 1313-1316
TOPIC TAGS: diene synthesis, phosphoric acid, chloride, organic amide, phenyl compound, isomer

ABSTRACT: The authors attempted to synthesize diethylphosphoric acid thionylamide by treating thionyl chloride with diethylphophoric acid amide; the attempt was successful, with the formation of (phosphonyl thionylamide) and release of hydrogen chloride following the addition of an equimolar amount of thionyl chloride to a benzene solution of diethylphosphoric acid amide and heating for 30 min. Since aromatic thionylamines, particularly those with electro-acceptor groups in the phenyl nucleus, as well as thionylsulfonamides, react fairly actively with various dienes, it was to be expected that phosphonyl thionylamide also would be an active dienophil; this was confirmed by reaction of phosphonyl thionylamide with various dienes (butadiene-1,3, isoprene, hexadiene-2,4, chloroprene, etc.). It was established that reaction between phosphonyl thionylamide and asymmetrically-substituted dienes is bound to lead to two structural isomers for each reaction. This article was presented by Academician B. A. Arbuzov on 12 April 1965. The authors thank Yu. Yu. Samitov, A. A. Musinaya and E. G. Yarkovaya for the plotting of the nuclear magnetic resonance and infrared spectrums and for valuable consultations concerning their interpretations. Orig. art. has: 1 figure and 1 table. [JPRS: 36,455]

SUB CODE: 07, 20 / SUBM DATE: 09Apr65 / ORIG REF: 004 / OTH REF: 006

Card 1/1

APPROVED FOR RELEASE: 09/19/2001 CIA-RDP86-00513R001032420006-3"

"APPROVED FOR RELEASE: 09/19/2001 CIA-RDP86-00513R001032420006-3

L 27502-66 EWT(m)/T/EWP(t)/ETI IJP(c) JH/JD/GS

ACC NR: AT6012369 SOURCE CODE: UR/0000/65/000/000/0048/0055

AUTHORS: Kornilov, I. I. (Doctor of chemical sciences, Professor); Volkova, M. A.; Pylayeva, Ye. N.; Kripyakevich, P. I.; Markiv, V. Ya.

ORG: none

TITLE: Investigation of equilibrium diagrams of titanium-rich alloys of the system Ti--Al

SOURCE: Soveshchaniye po metallokhimii, metallovedeniyu i primeneniyu titana i yego splavov, 6th. Novyye issledovaniya titanovykh splavov (New research on titanium alloys); trudy soveshchaniya. Moscow, Izd-vo Nauka, 1965, 48-55

TOPIC TAGS: titanium, aluminum, alloy phase diagram, titanium alloy, binary alloy, lattice parameter

ABSTRACT: The phase diagram of the binary system Ti-Al (containing up to 30% Al) was determined. The diagram was constructed on the basis of thermal, microstructural, dilatometrical, and x-ray analysis. In addition, the specific electrical resistance and hardness of the alloy specimens were determined. The investigation supplements earlier work of N. V. Grum-Grzhimaylo, I. I. Kornilov, Ye. N. Pylayeva, and M. A. Volkova, (Dokl. AN SSSR, 1961, 137, No. 3, 599). The experimental results are summarized in graphs and tables (see Fig. 1) and compared to earlier literature data. A rearrangement takes place in the alloys in the temperature region from 882 to 1250C. These temperatures correspond to a transition from a hexagonal close-packed structure

Card 1/3

APPROVED FOR RELEASE: 09/19/2001 CIA-RDP86-00513R001032420006-3"

"APPROVED FOR RELEASE: 09/19/2001 CIA-RDP86-00513R001032420006-3

L 27502-66

ACC NR: AT6012369

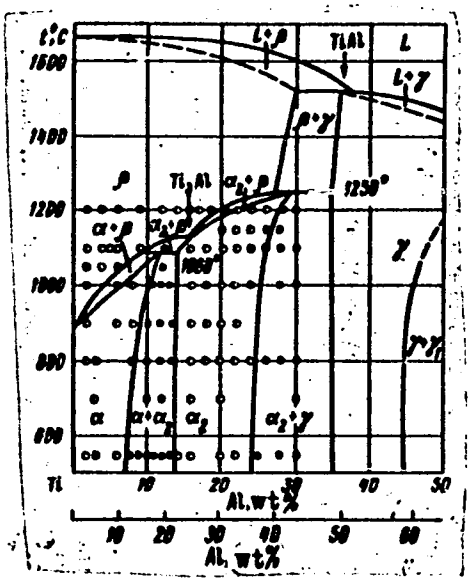

Fig. 1. Phase diagram of the system Ti--Al.

to a body-centered structure. The curves for the properties of alloys vs composition exhibit a minimum, the composition of which corresponds to the intermetallic compound Ti_3Al. The existence of the compound Ti_3Al was corroborated by x-ray analysis. The structure of Ti_3Al was found to resemble the Mg_3Cd structure. The lattice parameter

Card 2/3

APPROVED FOR RELEASE: 09/19/2001 CIA-RDP86-00513R001032420006-3"

"APPROVED FOR RELEASE: 09/19/2001 CIA-RDP86-00513R001032420006-3

L 27502-66

ACC NR: AT6012369

of the system Ti-Al was determined as a function of the composition (see Fig. 2).

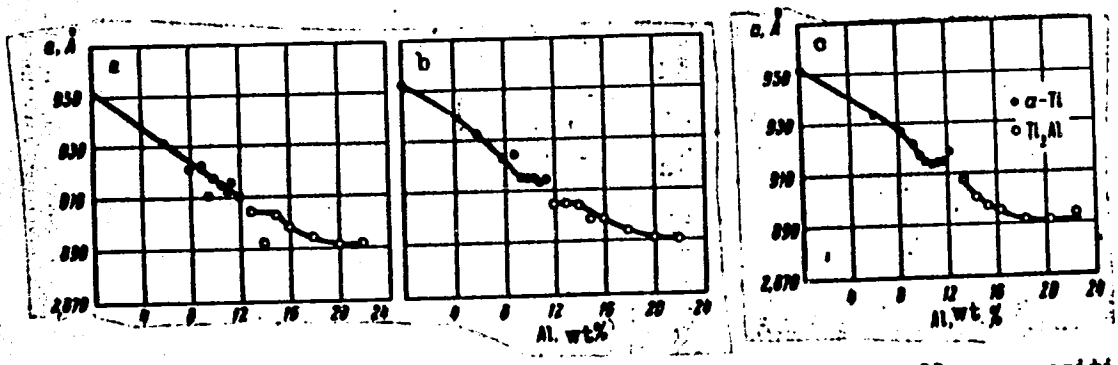

Fig. 2. Dependence of the lattice parameter of the alloy composition of the system Ti--Al annealed at 950C (a), 700C (b), and 550C (c).

Orig. art. has: 1 table and 6 figures.

SUB CODE: 11/ SUBM DATE: 02Dec65/ ORIG REF: 006/ OTH REF: 004

Card 3/3 BLG

APPROVED FOR RELEASE: 09/19/2001 CIA-RDP86-00513R001032420006-3"

"APPROVED FOR RELEASE: 09/19/2001 CIA-RDP86-00513R001032420006-3

MARKIN, Ye.A., SAVCHENKO, V.K.

Vibrations caused by broaching. Stan. i instr. 35 no.2:36-
F'64 (MIRA [illegible]

APPROVED FOR RELEASE: 09/19/2001 CIA-RDP86-00513R001032420006-3"

"APPROVED FOR RELEASE: 09/19/2001 CIA-RDP86-00513R001032420006-3

USSR/Farm Animals. The Swine 2-4

Abs Jour : Ref Zhur - Biol., No 11, 1958, N. 50079

Author : Shurmukhin, A.F., Markin Ye.F., Suleymanov M.S.
Inst : Sverdlovsk Farm Institute
Title : The Effect of Darkening of the Barn Upon the Intensity of Fat Deposition in Swine

Orig Pub : Tr. Sverdl. s.-kh. in-ta, 1957, 1, 203-205

Abstract : No abstract

Card : 1/1

APPROVED FOR RELEASE: 09/19/2001 CIA-RDP86-00513R001032420006-3"

"APPROVED FOR RELEASE: 09/19/2001 CIA-RDP86-00513R001032420006-3

AUTHORS: Markin, Ye. P., Sedley, N. I.

TITLE: The Infrared Reflection Spectrum of Boron Anhydride at High Temperatures (Infrakrasnyy spektr otrazheniya born[illegible] angidrida pri vysokikh temperaturakh)

PERIODICAL: Izvestiya Akademii nauk SSSR. Seriya fizicheskaya, [illegible], Vol 22, Nr 9, pp 1097 - 1099 (USSR)

ABSTRACT: In previous papers (Refs 1-3) an account was given of a thorough investigation of the vibration spectrum of boron anhydride. These studies, however, did not cover the infrared absorption spectrum of the molten boron anhydride, as the thin films of the boron oxide coagulated in melting. In this paper the experience gained in the investigation of the infrared reflection spectrum of boron anhydride at high temperatures is presented. For this investigation a special equipment was built, the scheme of which is given in figure 1. In order to eliminate the continuous spectrum which is emitted by the substance under investigation and by the heated furnace a modulation method was employed. In figure 2 the results of the experiments

Card 1/2

APPROVED FOR RELEASE: 09/19/2001 CIA-RDP86-00513R001032420006-3"

"APPROVED FOR RELEASE: 09/19/2001 CIA-RDP86-00513R001032420006-3

The Infrared Reflection Spectrum of Boron Anhydride at High Temperatures

SOV [illegible]

in the temperature range of 20 ÷ 1000° are given. The infrared fundamental bands found to be emitted by boron anhydride in vitreous state do not vanish in the liquid state up to a temperature of 1000°. This temperature corresponds to a viscosity of 74 poise (Ref [illegible]). These results substantiate the assumption that the molecule B_4O_6 is preserved as a structural unit in the transition from the vitreous state into the liquid state. The information which was recently published by Har and (Arran) (Ref 6) and the results obtained by the authors valid to the maintenance of the molecular structure of boron anhydride in the liquid and in the vitreous state. It is also confirmed that the B_4O_6 molecule belongs to the [illegible] group of the symmetry T_d. There are 3 figures and [illegible] references, 4 of which are Soviet.

ASSOCIATION: Fizicheskiy institut im. P.N.Lebedeva Akademii [illegible] (Institute of Physics imeni P.N.Lebedev AS USSR)

Card 2/2

APPROVED FOR RELEASE: 09/19/2001 CIA-RDP86-00513R001032420006-3"

"APPROVED FOR RELEASE: 09/19/2001 CIA-RDP86-00513R001032420006-3

APPROVED FOR RELEASE: 09/19/2001 CIA-RDP86-00513R001032420006-3"

"APPROVED FOR RELEASE: 09/19/2001 CIA-RDP86-00513R001032420006-3

Vitreous State SOV/[illegible]

Bartenev, [illegible] 147

Discussion 153

Optical [illegible] of Glass

Florinskaya, V.A., and [illegible] Products of the [illegible] 157

Florinskaya, V.A. [illegible] of Soda Silicate Glasses and Their Relation [illegible] 177

Alekseyev, A.G. [illegible] Products of the Na_2O-SiO_2 System [illegible] 194

Bobovich, Ya.S., [illegible] of Light (Raman Spectra) [illegible] 198

Kolesova, V.A. [illegible] by Their [illegible] 205

Card [illegible]

Vitreous State SOV/[illegible]

Markin, Ye.P., [illegible] Crystallization [illegible] 207

Sidorov, T.A. [illegible] of Crystalline Quartz 213

Brekhovskikh, S.M., [illegible] Borate and [illegible] 219

Vlasov, A.G. [illegible] Ordered and Disordered Phases in Glass 222

Bagdyelyan, G.V., and [illegible] Diffraction Study of Vitreous [illegible] 226

Kolyadin, A.I. [illegible] 230

Vitreous State SOV/[illegible]

Andreyev, N.[illegible] Glasses 234

Discussion 238

[illegible]

Myuller, [illegible] 245

[illegible]

Belyaev, [illegible] 254

Card [illegible]

APPROVED FOR RELEASE: 09/19/2001 CIA-RDP86-00513R001032420006-3"

"APPROVED FOR RELEASE: 09/19/2001 CIA-RDP86-00513R001032420006-3

84683

5.5310 1273, 1160, 1227

S/051/60/009/005/004/019
E201/E191

AUTHORS: Markin, Ye.P., and Sobolev, N.N.

TITLE: The Infrared Reflection Spectra of Boron Oxide and Fused Quartz at High Temperatures

PERIODICAL: Optika i spektroskopiya, 1960, Vol.9, No.5, pp 588-591

TEXT: Preliminary results on the infrared reflection spectrum of boron oxide at high temperatures were reported at the Eleventh All-Union Conference on Spectroscopy held in December 1957. The present paper deals with the infrared reflection spectra of B_2O_3 (between 21 and 1000 °C). For high-temperature measurements a special attachment to a single-beam spectrophotometer (IKS-11) was constructed (Fig. 1). To avoid recording a continuous spectrum emitted by a sample and the furnace at high temperatures, the infrared beam was modulated by means of a disc (2 in Fig. 1) rotating at 9 rev/sec. Radiation from a Silit rod (1), modulated by the disc, was focused by means of mirrors (3, 4 and 5) on the surface of a sample (6). The reflected beam was directed by means of mirrors (7-11) onto the entry slit (12) of IKS-11. From IKS-11 the beam proceeded via a mirror (13) to a bolometer (14) which was connected to an amplifier (the circuit is

Card 1/3

APPROVED FOR RELEASE: 09/19/2001 CIA-RDP86-00513R001032420006-3"

"APPROVED FOR RELEASE: 09/19/2001 CIA-RDP86-00513R001032420006-3

84683

S/051/60/009/005/004/019
E201/E191

The Infrared Reflection Spectra of Boron Oxide and Fused Quartz at High Temperatures

given in Fig. 2). To prevent the high temperature emission of the sample from being reflected by the modulator disc and thus reaching IKS-11, the disc was covered with a piece of black matt paper. The infrared reflection spectra of solid and liquid B_2O_3 are shown by continuous curves in Figs. 3 and 4 (the dashed curve in Fig. 4 is the absorption spectrum of vitreous B_2O_3). The infrared reflection spectra of fused quartz are shown in Fig. 5 at temperatures from -190 °C (solid, curve 1) to 2000 °C (liquid, curve 6). The temperature dependences of the reflection band positions (ν) and of viscosity (η) are given for B_2O_3 (curve a) and SiO_2 (curve б) in Fig. 6. The main features of the reflection spectrum of solid B_2O_3 were retained in liquid phase. In the case of SiO_2 the most intense band (8.9 μ at -190 °C) was observed both in solid and liquid states. The bands of both substances were displaced somewhat towards longer wavelengths by increase of temperature. These observations show that the main structural units of B_2O_3 and SiO_2 were retained on transition

Card 2/4

APPROVED FOR RELEASE: 09/19/2001 CIA-RDP86-00513R001032420006-3"

"APPROVED FOR RELEASE: 09/19/2001 CIA-RDP86-00513R001032420006-3

84683

S/051/60/009/005/004/019
E201/E191

The Infrared Reflection Spectra of Boron Oxide and Fused Quartz at High Temperatures

from solid (vitreous) to liquid state.

Acknowledgements are made to a member of the staff of the Institute of Metallurgy imeni Baykov, AS USSR, A F. Volodin, for his help, and to A.N. Danil'chenko for his advice.

There are 6 figures and 24 references: 12 Soviet, 6 English, 3 German, 2 Indian and 1 Belgian.

SUBMITTED: February 25, 1960

Card 3/3

APPROVED FOR RELEASE: 09/19/2001 CIA-RDP86-00513R001032420006-3"

"APPROVED FOR RELEASE: 09/19/2001 CIA-RDP86-00513R001032420006-3

MARKIN, E. P., OSIPOV, B. D., BASOV, N. G., KROKHIN, O. N. LISITZYIN, L. N.

"On Negative Photoconductivity and the Induced Electron Transitions"

Paper presented at the IUPAP International Conference on Photoconductivity, Ithaca, New York, 21-24 Aug. 1961.

APPROVED FOR RELEASE: 09/19/2001 CIA-RDP86-00513R001032420006-3"

"APPROVED FOR RELEASE: 09/19/2001 CIA-RDP86-00513R001032420006-3

28767
S/056/61/041/003/020/020
B113/B102

9.4177 (1138)

AUTHORS: Basov, N. G., Krokhin, O. N., Lisitsyn, L. M., Markin, Ye.P., Osipov, B. D.

TITLE: Negative conductivity in induced transitions

PERIODICAL: Zhurnal eksperimental'noy i teoreticheskoy fiziki, v. 41, no. 3(9), 1961, 988-989

TEXT: In indirect transitions the carrier concentration at which a negative temperature occurs relative to the band-to-band transition, is comparatively small. It is by some orders of magnitude lower than the concentration at which a negative absorption coefficient exists for photons with an energy that is comparable with the width of the forbidden band. For the existence of a negative absorption coefficient it is necessary that the probability of induced photon emission in the band-to-band transition considerably exceeds the photon absorption probability in the inverse process in order to compensate also absorption in inner transitions. The processes, however, that are connected with internal absorption practically do not influence conductivity since they do not change the

Card 1/5

APPROVED FOR RELEASE: 09/19/2001 CIA-RDP86-00513R001032420006-3"

"APPROVED FOR RELEASE: 09/19/2001 CIA-RDP86-00513R001032420006-3

28767

S/056/61/041/003/020/020
B113/B102

Negative conductivity in induced...

total number of free carriers. The band-to-band transitions which are in a state with negative temperature and which were induced by photon irradiation, reduce the number of free carriers and lead to a decrease in conductivity. Hence, the semiconductor which is in a state with negative temperature relative to the band-to-band transition is bound to have negative photoconductivity when irradiated with photons, whose energy is almost equal to the width of the forbidden band. The measurement of the spectral dependence of the semiconductor photoconductivity permits the determination of the states with negative temperatures also with lacking negative absorption coefficient. The authors made experiments for the production and observation of states with negative temperature in silicon. The specimen was irradiated at 4°K with light of a wavelength smaller than 0.7 μ which considerably increased its conductivity. Upon additional irradiation with weak monochromatic light a conductivity reduction (negative photoconductivity) was observed for a series of specimens in a narrow band of wavelengths near 1.1 μ. It can be assumed that the conductivity decrease observed is due to the existence of a state with negative temperature. However, also other explanations, such as impurity photoconductivity, are possible. [Abstracter's note: Essentially

Card 2/3

APPROVED FOR RELEASE: 09/19/2001 CIA-RDP86-00513R001032420006-3"

"APPROVED FOR RELEASE: 09/19/2001 CIA-RDP86-00513R001032420006-3

28767

Negative conductivity in induced... S/056/61/041/003/020/020
B113/B102

Complete translation.] There are 3 Soviet references.

ASSOCIATION: Fizicheskiy institut im. P. N. Lebedeva Akademii nauk SSSR (Physics Institute imeni P. N. Lebedev of the Academy of Sciences USSR)

SUBMITTED: July 13, 1961

Card 3/3

APPROVED FOR RELEASE: 09/19/2001 CIA-RDP86-00513R001032420006-3"

"APPROVED FOR RELEASE: 09/19/2001 CIA-RDP86-00513R001032420006-3

S/056/62/043/003/0[illegible]
B104/B102

AUTHORS: Basov, N. G., [illegible]rkin, Ye. P., Mash, D. I.

TITLE: Some characteristics of neon-helium quantum generator

PERIODICAL: Zhurnal [illegible] teoreticheskoy fiziki, [illegible], [illegible], 1116-1117

TEXT: The quantum generator shown in the figure is described. This operates on the principle of A. Javan (Phys. Rev. Lett., [illegible], [illegible], [illegible]). The discharge in the gas mixture is excited by a [illegible] generator by way of external electrodes. Interference mirrors with [illegible] coefficient of reflection are used. They consist of 13 quarter-wave [illegible] films and cryolite. The mirror backings were optical fused quartz with a transmission factor of about 1 % for 11,530 Å waves. Power and angular dependence of the 11,530 Å emission were measured. The beam divergence was about one angular minute and the power about 6.2 mw. The latter remained virtually constant throughout the range of the neon-to-helium partial pressure ratios of 1:10-1:4 but decreased when the neon partial pressure was further increased. There is 1 figure.

Card 1/2

APPROVED FOR RELEASE: 09/19/2001 CIA-RDP86-00513R001032420006-3"

"APPROVED FOR RELEASE: 09/19/2001 CIA-RDP86-00513R001032420006-3

Some characteristics of neon-helium... S/056/62/043/003/006/[illegible]
B104/B102

ASSOCIATION: Fizicheskiy institut im. P. N. Lebedeva Akademii [illegible] (Physics Institute imeni P. N. Lebedev of the Academy of Sciences USSR)

SUBMITTED: July 5, 1962

Fig. Quantum generator.

Legend: (1) window, (2) mirror.

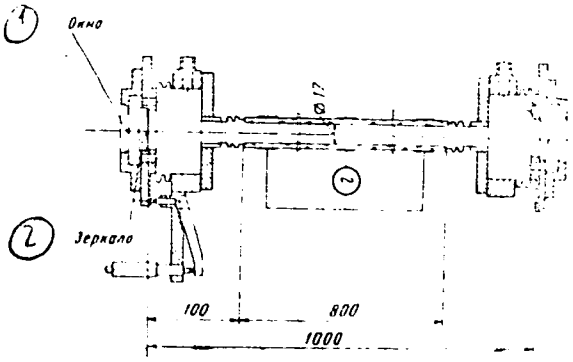

Card 1/2

APPROVED FOR RELEASE: 09/19/2001 CIA-RDP86-00513R001032420006-3"